Cambridge International **A Level**

Cambridge International Examinations
Cambridge International Advanced Level

CANDIDATE NAME

CENTRE NUMBER

CANDIDATE NUMBER

3280309247

PHYSICS **9702/51**

Paper 5 Planning, Analysis and Evaluation **October/November 2014**

1 hour 15 minutes

Candidates answer on the Question Paper.

No Additional Materials are required.

READ THESE INSTRUCTIONS FIRST

Write your Centre number, candidate number and name on all the work you hand in.
Write in dark blue or black pen.
You may use an HB pencil for any diagrams or graphs.
Do not use staples, paper clips, glue or correction fluid.
DO **NOT** WRITE IN ANY BARCODES.

Answer **all** questions.

Electronic calculators may be used.
You may lose marks if you do not show your working or if you do not use appropriate units.

At the end of the examination, fasten all your work securely together.
The number of marks is given in brackets [ ] at the end of each question or part question.

DC (SJF/CGW) 77200/2
© UCLES 2014

CAMBRIDGE International Examinations

1 A student investigates the power dissipated by a lamp connected to a model wind turbine as shown in Fig. 1.1.

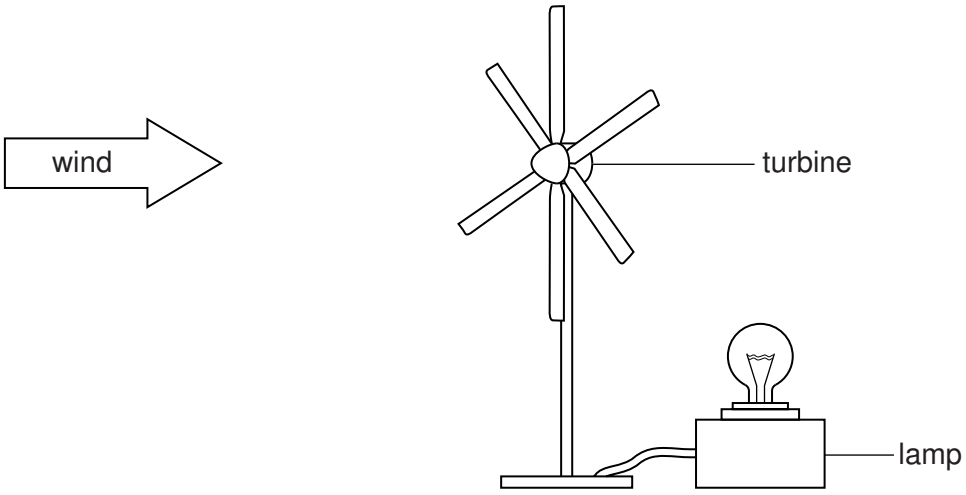

Fig. 1.1

The power P dissipated in the lamp depends on the angle θ between the axis of the turbine and the direction of the wind, as shown by the top view in Fig. 1.2.

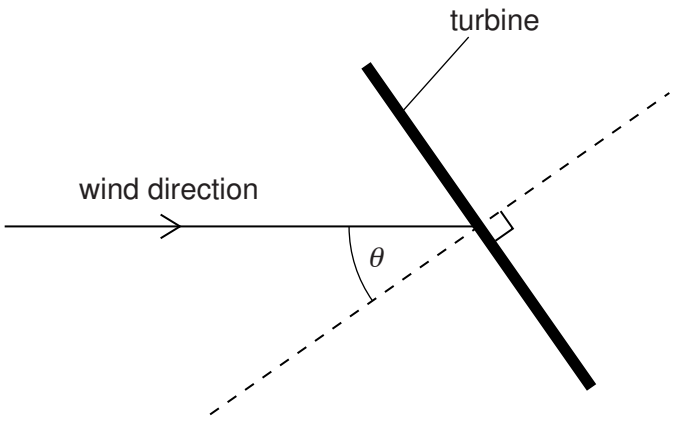

Fig. 1.2

It is suggested that

$$P = k\cos\theta$$

where k is a constant.

Design a laboratory experiment to test the relationship between P and θ and determine a value for k. You should draw a diagram, on page 3, showing the arrangement of your equipment. In your account you should pay particular attention to

(a) the procedure to be followed,

(b) the measurements to be taken,

(c) the control of variables,

(d) the analysis of the data,

(e) the safety precautions to be taken.

[15]

© UCLES 2014

Diagram

.....

.....

.....

.....

.....

.....

.....

.....

.....

.....

.....

.....

.....

.....

.....

.....

.....

.....

.....

.....

.....

.....

Defining the problem	Methods of data collection	Method of analysis	Safety considerations	Additional detail

2 A student investigates electrical resonance in a circuit containing a capacitor and a coil connected in parallel.

The circuit is set up as shown in Fig. 2.1.

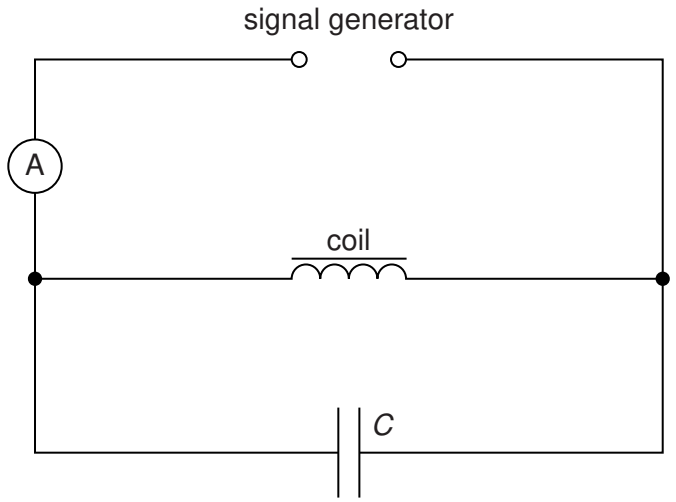

Fig. 2.1

The resonant frequency f is the frequency at which the current measured by the ammeter is a minimum.

An experiment is carried out to investigate how f varies with the capacitance C of the capacitor.

It is suggested that f and C are related by the equation

$$f = \frac{1}{2\pi\sqrt{LC}}$$

where L is a constant for the circuit.

(a) A graph is plotted of f^2 on the y-axis against $\frac{1}{C}$ on the x-axis. Determine an expression for the gradient in terms of L.

gradient = ... [1]

(b) Values of f and C are given in Fig. 2.2.

$C/10^{-4}\,\text{F}$	f/Hz	$\frac{1}{C}/10^{3}\,\text{F}^{-1}$	$f^{2}/10^{3}\,\text{Hz}^{2}$
2.5 ± 10%	149		
3.0 ± 10%	134		
3.5 ± 10%	123		
4.4 ± 10%	107		
6.6 ± 10%	82		
8.8 ± 10%	65		

Fig. 2.2

Calculate and record values of $\frac{1}{C}/10^{3}\,\text{F}^{-1}$ and $f^{2}/10^{3}\,\text{Hz}^{2}$ in Fig. 2.2.

Include the absolute uncertainties in $\frac{1}{C}$. [3]

(c) **(i)** Plot a graph of $f^{2}/10^{3}\,\text{Hz}^{2}$ against $\frac{1}{C}/10^{3}\,\text{F}^{-1}$. Include error bars for $\frac{1}{C}$. [2]

(ii) Draw the straight line of best fit and a worst acceptable straight line on your graph. Both lines should be clearly labelled. [2]

(iii) Determine the gradient of the line of best fit. Include the uncertainty in your answer.

gradient = ... [2]

© UCLES 2014

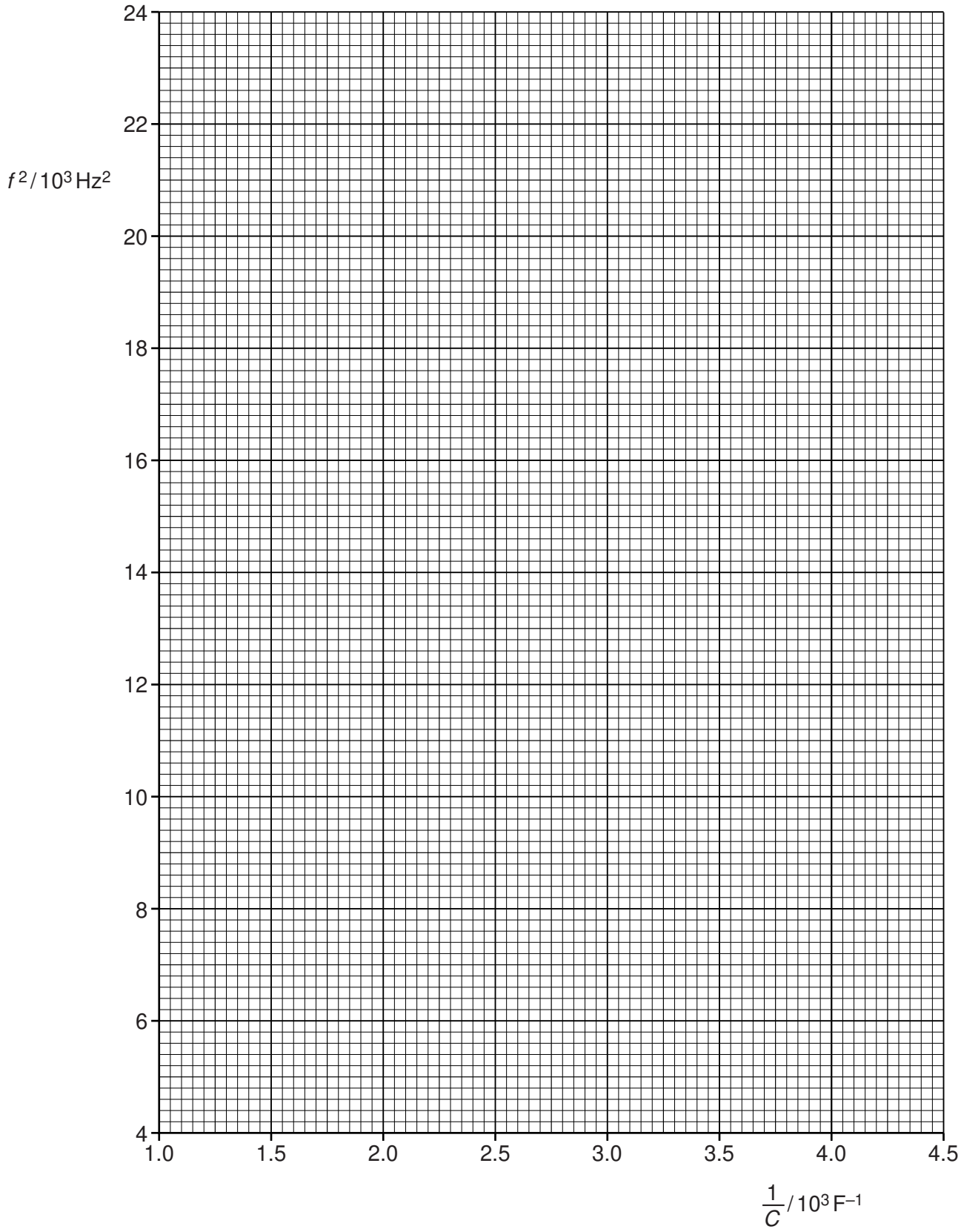
24
22
$f^2 / 10^3\,\text{Hz}^2$
20
18
16
14
12
10
8
6
4
1.0
1.5
2.0
2.5
3.0
3.5
4.0
4.5
$\frac{1}{C} / 10^3\,\text{F}^{-1}$

(d) Using your answer to **(c)(iii)**, determine the value of *L*. Include the absolute uncertainty in your value and an appropriate unit.

L = ... [3]

(e) The experiment is repeated using a capacitor of capacitance 10 μF ± 10%.

(i) Using the relationship given and your answer to **(d)**, determine the value of *f*.

f = ... Hz [1]

(ii) Determine the percentage uncertainty in the value of *f*.

percentage uncertainty = ... % [1]

Permission to reproduce items where third-party owned material protected by copyright is included has been sought and cleared where possible. Every reasonable effort has been made by the publisher (UCLES) to trace copyright holders, but if any items requiring clearance have unwittingly been included, the publisher will be pleased to make amends at the earliest possible opportunity.

Cambridge International Examinations is part of the Cambridge Assessment Group. Cambridge Assessment is the brand name of University of Cambridge Local Examinations Syndicate (UCLES), which is itself a department of the University of Cambridge.